VIKING

TECHNICAL DATA

STANDARD/QUICK RESPONSE EXTENDED COVERAGE ORDINARY HAZARD ELO SPRINKLERS

The Viking Corporation, 210 N Industrial Park Road, Hastings MI 49058
Telephone: 269-945-9501 Technical Services 877-384-5464 Fax: 269-945-4495 Email: techsvcs@vikingcorp.com

1. DESCRIPTION

Viking EC/QREC Ordinary Hazard Extra-Large Orifice Sprinklers VK532 and VK534 are thermosensitive spray sprinklers available in several different finishes and temperature ratings to meet varying design requirements. The extra-large orifice produces the flows required to meet Ordinary Hazard density requirements at lower pressures than standard orifice or large orifice sprinklers. The special deflector is designed to meet Ordinary-Hazard density requirements for specifically listed extended areas of coverage when the required minimum water supply is provided at the sprinkler. Upright Sprinkler VK532 is UL Listed and FM Approved as standard response; Pendent Sprinkler VK534 is UL Listed as standard response and quick response.

The special Polyester and Teflon® coatings can be used in decorative applications where colors are desired. In addition, the Polyester and Teflon® finishes are cULus listed as corrosion resistant as indicated in the Approval Chart. (Note: FM Global has no approval classification for Polyester or Teflon® coatings as corrosion resistant.)

2. LISTINGS AND APPROVALS

cULus Listed: Category VNIV
FM Approved: Class 2022
NYC Approved: MEA 89-92-E, Volume 9

Refer to the Approval Chart on page 83d and Design Criteria on page 83e for cULus Listing and FM Approval requirements that must be followed.

3. TECHNICAL DATA

Viking Technical Data may be found on The Viking Corporation's Web site at http://www.vikinggroupinc.com. The Web site may include a more recent edition of this Technical Data Page.

Specifications:

Minimum Operating Pressure: Refer to the Approval Chart.
Maximum Working Pressure: 175 psi (12 Bar). Factory tested hydrostatically to 500 psi (34.5 bar).
Factory tested hydrostatically to 500 psi (34.5 bar).
Thread size: 3/4" (20 mm) NPT
Nominal K-Factor: 11.2 U.S. (161.3 metric†)
†Metric K-factor measurement shown is when pressure is measured in Bar. When pressure is measured in kPa, divide the metric K-factor shown by 10.0.
Glass-bulb fluid temperature rated to -65 °F (-55 °C)
Overall Length: Part No. 08687: 2-5/16 (59 mm)
Part No. 08340: 2-3/8" (61 mm)

Material Standards:

Sprinkler Frame: Brass UNS-C84400
Deflector: Brass UNS-C26000 for Sprinkler 08340. Copper UNS-C19500 for Sprinkler 08687
Bulb: Glass, nominal 3 mm diameter
Belleville Spring Sealing Assembly: Nickel Alloy, coated on both sides with Teflon Tape
Screw: Brass UNS-C36000
Pip Cap and Insert Assembly: Copper UNS-C11000 and Stainless Steel UNS-S30400
For Teflon® Coated Sprinklers: Belleville Spring-Exposed, Screw-Nickel Plated, Pip Cap-Teflon® Coated
For Polyester Coated Sprinklers: Belleville Spring-Exposed

Ordering Information: (Also refer to the current Viking price list.)

Order EC/QREC Ordinary Hazard Extra-Large Orifice Sprinklers VK532 and VK534 by first adding the appropriate suffix for the sprinkler finish and then the appropriate suffix for the temperature rating to the sprinkler base part number.
Finish Suffix: Brass = A, Chrome-Enloy® = F, White Polyester = M-/W, Black Polyester = M-/B, and Black Teflon® = N
Temperature Suffix (°F/°C): 155°/68° = B, 175°/79° = D, 200°/93° = E, and 286°/141° = G
For example, sprinkler VK532 with a Brass finish and a 155 °F/68 °C temperature rating = Part No. 08687AB

VIKING

TECHNICAL DATA

STANDARD/QUICK RESPONSE EXTENDED COVERAGE ORDINARY HAZARD ELO SPRINKLERS

The Viking Corporation, 210 N Industrial Park Road, Hastings MI 49058
Telephone: 269-945-9501 Technical Services 877-384-5464 Fax: 269-945-4495 Email: techsvcs@vikingcorp.com

Available Finishes And Temperature Ratings:

Refer to Table 1

Accessories: (Also refer to the "Sprinkler Accessories" section of the Viking data book.)

Sprinkler Wrenches:

A. Standard Wrench: Part No. 05118CW/B (available since 1981)
B. Wrench for recessed pendent sprinkler: Part No. 11663W/B** (available since 2001)
**A ½" ratchet is required (not available from Viking).

Sprinkler Cabinets:

A. Six-head capacity: Part No. 01724A (available since 1971)
B. Twelve-head capacity: Part No. 01725A (available since 1971)

4. INSTALLATION

Refer to appropriate NFPA Installation Standards.

5. OPERATION

During fire conditions, the heat-sensitive liquid in the glass bulb expands, causing the glass to shatter, releasing the pip cap and sealing spring assembly. Water flowing through the sprinkler orifice strikes the sprinkler deflector, forming a uniform spray pattern to extinguish or control the fire.

6. INSPECTIONS, TESTS AND MAINTENANCE

Refer to NFPA 25 for Inspection, Testing and Maintenance requirements.

7. AVAILABILITY

Viking Sprinklers VK532 and VK534 are available through a network of domestic and international distributors. See The Viking Corporation web site for the closest distributor or contact The Viking Corporation.

8. GUARANTEE

For details of warranty, refer to Viking's current list price schedule or contact Viking directly.

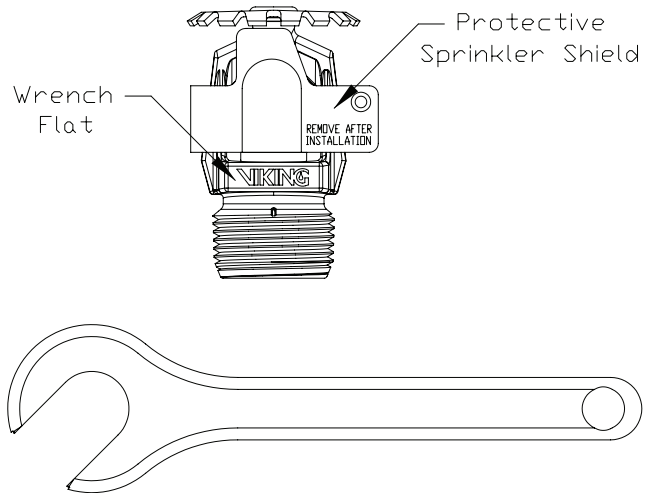

Figure 1:
Standard Sprinkler Wrench 05118CW/B

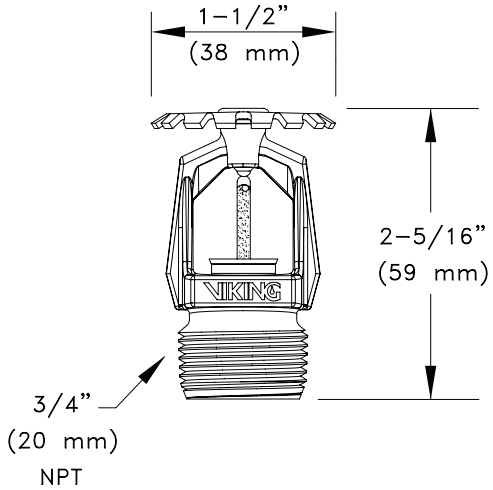

Figure 2:
Upright Sprinkler VK532

VIKING	TECHNICAL DATA	STANDARD/QUICK RESPONSE EXTENDED COVERAGE ORDINARY HAZARD ELO SPRINKLERS

The Viking Corporation, 210 N Industrial Park Road, Hastings MI 49058
Telephone: 269-945-9501 Technical Services 877-384-5464 Fax: 269-945-4495 Email: techsvcs@vikingcorp.com

TABLE 1: AVAILABLE SPRINKLER TEMPERATURE RATINGS AND FINISHES

Sprinkler Temperature Classification	Sprinkler Nominal Temperature Rating[1]	Maximum Ambient Ceiling Temperature[2]	Bulb Color
Ordinary	155 °F (68 °C)	100 °F (38 °C)	Red
Intermediate	175 °F (79 °C)	150 °F (65 °C)	Yellow
Intermediate	200 °F (93 °C)	150 °F (65 °C)	Green
High	286 °F (141 °C)	225 °F (107 °C)	Blue

Sprinkler Finishes: Brass, Chrome-Enloy®, White Polyester, Black Polyester, and Black Teflon®
Corrosion-Resistant Coatings[3]: White Polyester, Black Polyester, and Black Teflon®

Footnotes

[1] The sprinkler temperature rating is stamped on the deflector.

[2] Based on NFPA-13. Other limits may apply, depending on fire loading, sprinkler location, and other requirements of the Authority Having Jurisdiction. Refer to specific installation standards.

[3] The corrosion-resistant coatings have passed the standard corrosion test required by the approving agencies indicated in the Approval Chart. These tests cannot and do not represent all possible corrosive environments. Prior to installation, verify through the end-user that the coatings are compatible with or suitable for the proposed environment. For automatic sprinklers, the coatings indicated are applied to the exposed exterior surfaces only. Note that the spring is exposed on sprinklers with Polyester and Teflon® coatings. For Teflon® coated open sprinklers only, the waterway is coated.

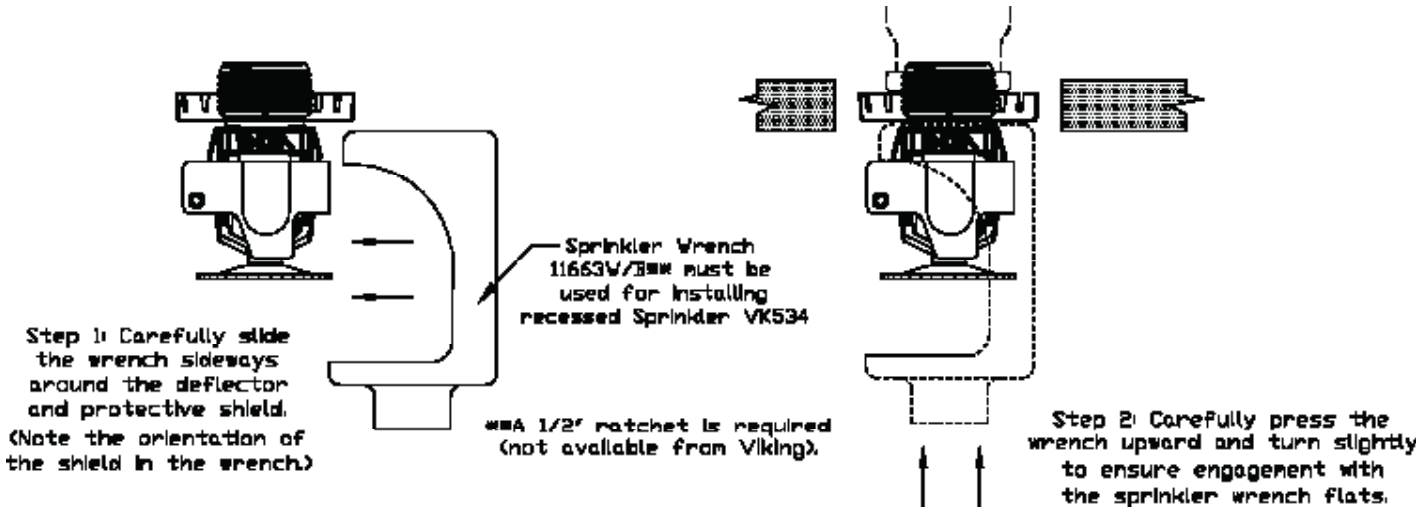

Figure 3: Wrench 11663W/B for Recessed Pendent Sprinkler VK534

VIKING

TECHNICAL DATA

STANDARD/QUICK RESPONSE EXTENDED COVERAGE ORDINARY HAZARD ELO SPRINKLERS

The Viking Corporation, 210 N Industrial Park Road, Hastings MI 49058
Telephone: 269-945-9501 Technical Services 877-384-5464 Fax: 269-945-4495 Email: techsvcs@vikingcorp.com

Sprinkler Base Part Number[1]	SIN	NPT Thread Size		Nominal K-Factor		Maximum Water Working Pressure	Overall Length	
		Inches	mm	U.S.	metric[2]		Inches	mm
08687 Upright	VK532	3/4	20	11.2	161.3	175 psi (12 Bar)	2-5/16	59
08340 Pendent	VK534	3/4	20	11.2	161.3		2-3/8	61

Approval Chart

EC/QREC Ordinary Hazard ELO Sprinklers

KEY: Temperature, Finish, Escutcheon (if applicable) — A1X

Maximum Sprinkler Spacing (L x W[6])	Maximum Area per Sprinkler	Minimum Water Supply Requirements[6]		Listings and Approvals[3]			
		Ordinary Hazard Group I	Ordinary Hazard Group II	Pendent VK534		Upright VK532	
		Flow / Pressure	Flow / Pressure	cULus[4]	NYC[5]	cULus[4]	NYC[5]
Standard Response							
12 ft. x 12 ft. (3.7 m x 3.7 m)	144 ft² (13.4 m²)	30 gpm @ 7.2 psi (113.6 L/min @ .50 Bar)	30 gpm @ 7.2 psi (113.6 L/min @ .50 Bar)	**Pendent Sprinkler VK534 is Listed as QR for 12' x 12' and 14' x 14' areas. (See listings below)**		A1	A1
14 ft. x 14 ft. (4.3 m x 4.3 m)	196 ft² (18.2 m²)	30 gpm @ 7.2 psi (113.6 L/min @ .50 Bar)	39 gpm @ 12.1 psi (147.7 L/min @ .84 Bar)			A1	A1
16 ft. x 16 ft. (4.9 m x 4.9 m)	256 ft² (23.8 m²)	38 gpm @ 11.5 psi (143.9 L/min @ .79 Bar)	51 gpm @ 20.7 psi (193.1 L/min @ 1.43 Bar)	A1X, B1Y	A1X, B1Y	A1	A1
18 ft. x 18 ft. (5.5 m x 5.5 m)	324 ft² (30.1 m²)	49 gpm @ 19.1 psi (185.5 L/min @ 1.32 Bar)	65 gpm @ 33.7 psi (246.1 L/min @ 2.32 Bar)	A1X, B1Y	A1X, B1Y	A1	A1
20 ft. x 20 ft. (6.1 m x 6.1 m)	400 ft² (37.2 m²)	60 gpm @ 28.7 psi (227.1 L/min @ 1.98 Bar)	80 gpm @ 51.0 psi (302.8 L/min @ 3.52 Bar)	A1X, B1Y	A1X, B1Y	A1	A1
Quick Response Pendent Sprinkler VK534 (cULus only)							
12 ft. x 12 ft. (3.7 m x 3.7 m)	144 ft² (13.4 m²)	30 gpm @ 7.2 psi (113.6 L/min @ .50 Bar)	39 gpm @ 12.1 psi (147.7 L/min @ .84 Bar)	A1X, B1Y	--	--	--
14 ft. x 14 ft. (4.3 m x 4.3 m)	196 ft² (18.2 m²)	30 gpm @ 7.2 psi (113.6 L/min @ .50 Bar)	39 gpm @ 12.1 psi (147.7 L/min @ .84 Bar)	A1X, B1Y	--	--	--

		FM Approvals - Standard Response Requirements (Upright only):	FM Approval (Standard Response)	
			Pendent VK534	Upright VK532
12 ft. x 12 ft. (3.7 m x 3.7 m)	144 ft² (13.4 m²)	**Refer to the Design Criteria section on page 83e.**	--	A2
14 ft. x 14 ft. (4.3 m x 4.3 m)	196 ft² (18.2 m²)	NOTE: FM installation guidelines may differ from cULus and/or NFPA criter	--	A2
16 ft. x 16 ft. 4.9 m x 4.9 m)	256 ft² (23.8 m²)		--	A2

Approved Temperature Ratings

A - 155 °F (68 °C), 175 °F (79 °C), 200 °F (93 °C), and 286 °F (141 °C)
B - 155 °F (68 °C), 175 °F (79 °C), and 200 °F (93 °C)
C - 155 °F (68 °C)

Approved Finishes

1 - Brass, Chrome-Enloy®, White Polyester[7], Black Polyester[7], and Black Teflon®[7]
2 - Brass, Chrome-Enloy®, and White Polyester

Approved Escutcheons

X - Standard surface-mounted escutcheons or the Microfast® Model F-1 Adjustable Escutcheon[8]
Y - Standard surface-mounted escutcheons or the Microfast® Model F-1 Adjustable Escutcheon[8], or recessed with the Micromatic® Model E-1 or E-2 Recessed Escutcheon

Footnotes

[1] Part number shown is the base part number. For complete part number, refer to current Viking price list schedule.

[2] Metric K-factor measurement shown is when pressure is measured in Bar. When pressure is measured in kPa, divide the metric K-factor shown by 10.0.

[3] This chart shows listings and approvals available at time of printing. Check with the manufacturer for any additional approvals.

[4] cULus Listed for use in the U.S. and Canada.

[5] Accepted for use, City of New York Department of Buildings, MEA 89-92 Vol. 9.

[6] To determine "Minimum Water Supply Requirement" for areas of coverage where length and width of actual sprinkler spacing are not equal, select the "Maximum Sprinkler Spacing" from the chart that is equal to or greater than the larger of the actual spacing (length or width) dimensions used. Example: When using 10'-6" x 13'-0" sprinkler spacing, provide the "Minimum Water Supply Requirement" listed in the chart for 14'-0" x 14'-0" spacing. For areas of coverage smaller than shown, use the "Minimum Water Supply Requirement" in the appropriate hazard group for the next larger area listed. The distance from sprinklers to walls shall not exceed one-half the "Maximum Sprinkler Spacing" listed for the "Minimum Water Supply Requirement" used.

[7] cULus Listed as corrosion resistant.

[8] The Microfast® Model F-1 Adjustable Escutcheon is considered a surface-mounted escutcheon because it does not allow the fusible element of the sprinkler to be recessed behind the face of the wall or ceiling.

VIKING

TECHNICAL DATA

STANDARD/QUICK RESPONSE EXTENDED COVERAGE ORDINARY HAZARD ELO SPRINKLERS

The Viking Corporation, 210 N Industrial Park Road, Hastings MI 49058
Telephone: 269-945-9501 Technical Services 877-384-5464 Fax: 269-945-4495 Email: techsvcs@vikingcorp.com

DESIGN CRITERIA

(Also refer to the Approval Chart on page 83d.)

cULus Listing Requirements:

ECOH-ELO Upright Sprinkler VK532 and Pendent Sprinkler VK534 are cULus Listed as indicated in the Approval Chart for installation in accordance with the latest edition of NFPA 13 for extended coverage upright and pendent spray sprinklers as indicated below:

- The minimum water supplies and maximum areas of coverage shown in the Approval Chart are designed to provide the following design densities: 0.15 gpm/ft^2 (6.1 mm/min) for Ordinary-Hazard Group I densities; 0.2 gpm/ft.^{2} (8.1 mm/min) for Ordinary-Hazard Group II densities.
- The sprinkler installation rules contained in NFPA 13 for extended coverage upright and pendent spray sprinklers must be followed.
- Also, Viking ECOH-ELO Upright and Pendent Sprinklers are cULus Listed for use in unobstructed construction, and noncombustible obstructed construction consisting of solid steel and/or concrete beams as defined in the latest edition of NFPA 13.
- Ceiling slope not to exceed 2/12 (9.5°).

FM Approval Requirements:

ECOH-ELO Upright Sprinkler VK532 is FM Approved as Standard Response for installation in accordance with the latest applicable FM Loss Prevention Data Sheets and Technical Advisory Bulletins as indicated below:

- For limited use in buildings of specific ceiling or roof construction and for the protection of certain specific ordinary hazard occupancies (non-storage and/or non-flammable or non-combustible liquid).

FM Global Loss Prevention Data Sheets and Technical Advisory Bulletins contain guidelines relating to, but not limited to: minimum water supply requirements, hydraulic design, ceiling slope and obstructions, minimum and maximum allowable spacing, and deflector distance below the ceiling.

NOTE: The FM installation guidelines may differ from cULus and/or NFPA criteria.

IMPORTANT: Always refer to Bulletin Form No. F_091699 - Care and Handling of Sprinklers. Also refer to pages EC1-3 for general care, installation, and maintenance information. Viking sprinklers are to be installed in accordance with the latest edition of Viking technical data, the appropriate standards of NFPA, FM Global, LPCB, APSAD, VdS or other similar organizations, and also with the provisions of governmental codes, ordinances, and standards, whenever applicable.

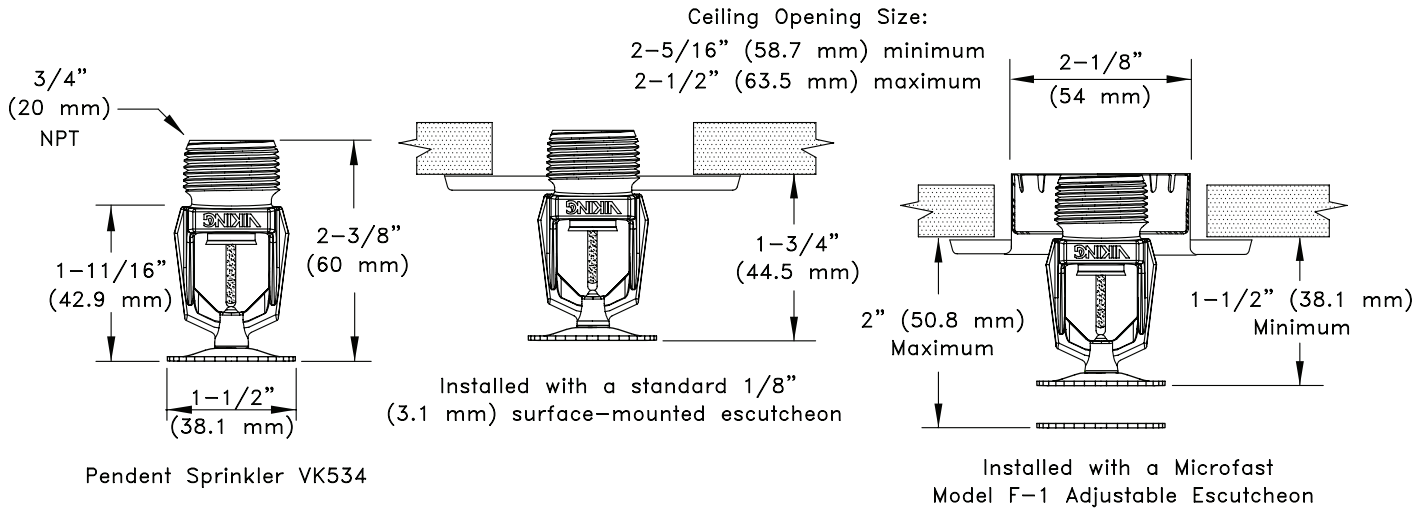

Figure 4: Sprinkler VK534 Dimensions with a Standard Escutcheon and the Model F-1 Adjustable Escutcheon

VIKING

TECHNICAL DATA

STANDARD/QUICK RESPONSE EXTENDED COVERAGE ORDINARY HAZARD ELO SPRINKLERS

The Viking Corporation, 210 N Industrial Park Road, Hastings MI 49058
Telephone: 269-945-9501 Technical Services 877-384-5464 Fax: 269-945-4495 Email: techsvcs@vikingcorp.com

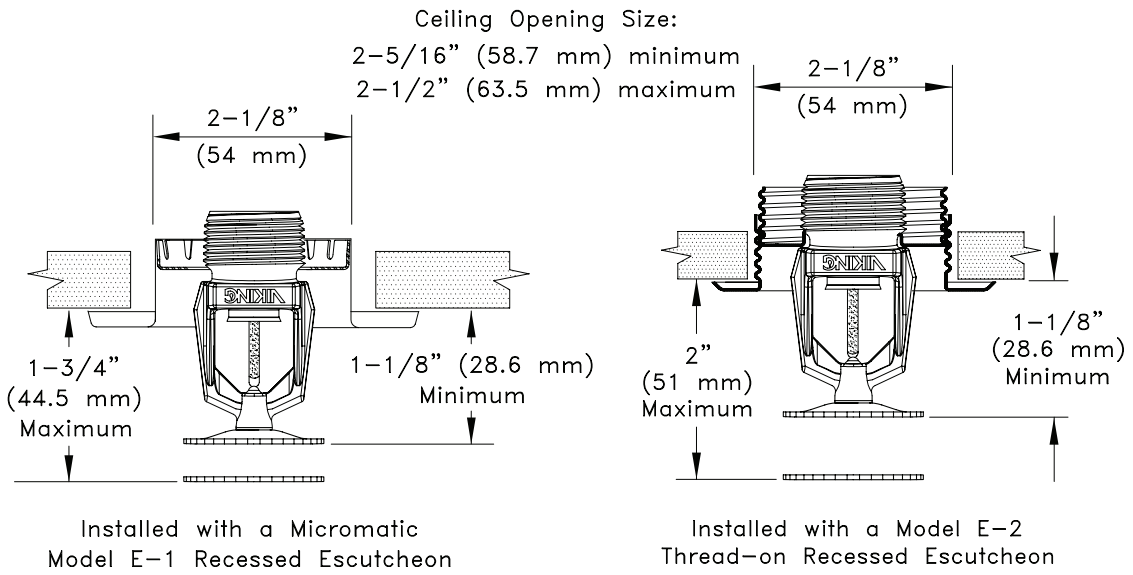

Figure 5: Sprinkler VK534 Dimensions with the Model E-1 and E-2 Recessed Escutcheons